SKYLINE COLLEGE AUTOMOTIVE TECHNOLOGY

ELECTRICAL FORMULAS

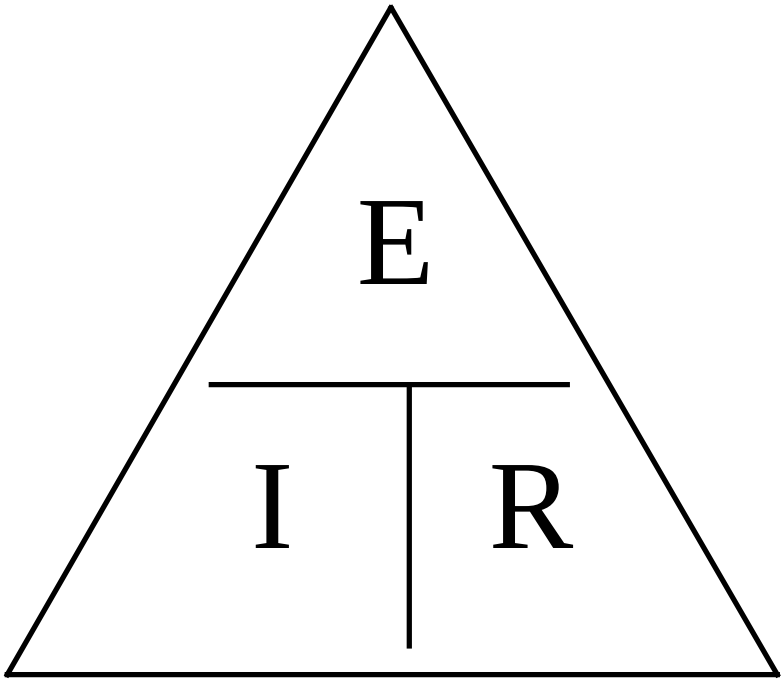

VOLTS = AMPS X OHMS

WORKBOOK

Developed by K. Sullivan

Revised 8/96

ELECTRICAL FORMULAS

OHM'S LAW

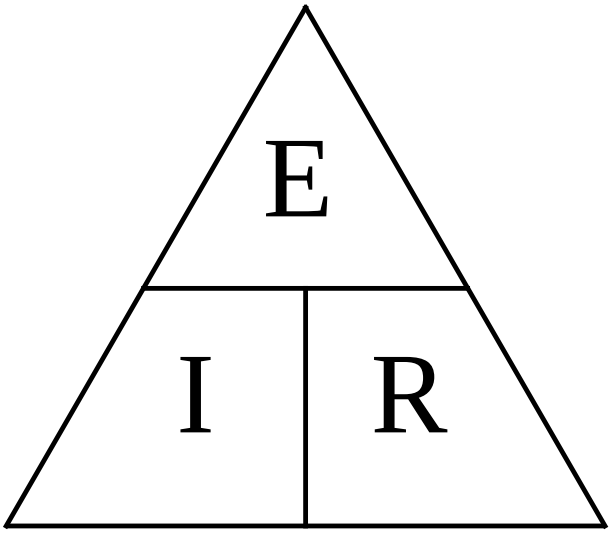

VOLTS = AMPS X OHMS

WATTS

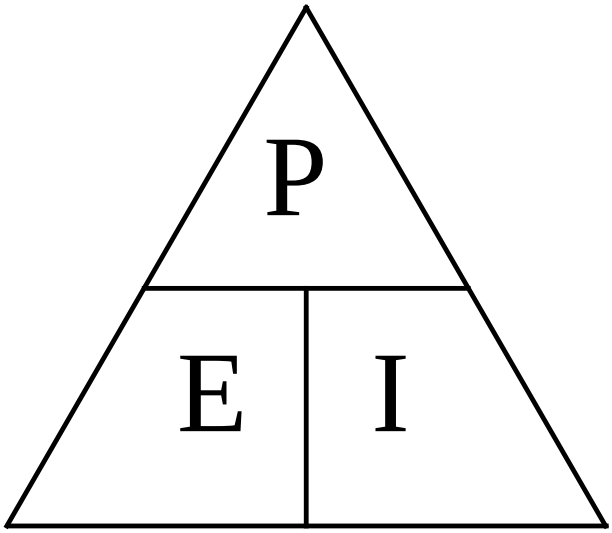

POWER = VOLTS X AMPS

SERIES CIRCUIT FORMULAS

$$R_T = R_1 + R_2 + R_3 \ldots + R_N$$

$$V_T = V_1 + V_2 + V_3 \ldots + V_N$$

E = volts
I = amps
R = resistance

PARALLEL CIRCUIT FORMULAS

$$I_T = I_1 + I_2 + I_3 \ldots + I_N$$

$$R_T = \frac{R_1 \times R_2}{R_1 + R_2}$$

OR

$$R_T = \frac{1}{\frac{1}{R_1} + \frac{1}{R_2} + \frac{1}{R_3} .. + \frac{1}{R_N}}$$

1. V=14v

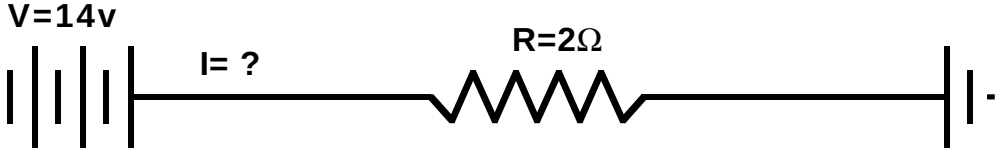

2. V= ?

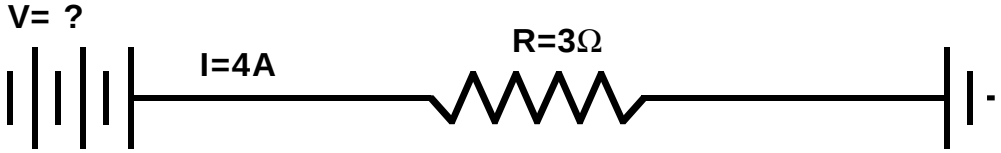

3. V=12v

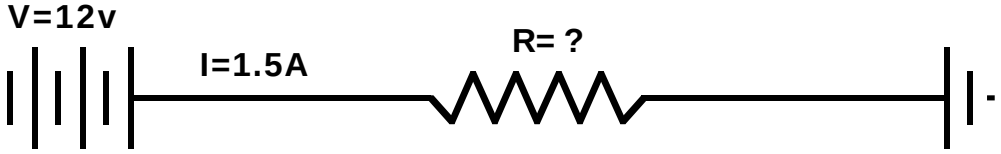

4. V=12v

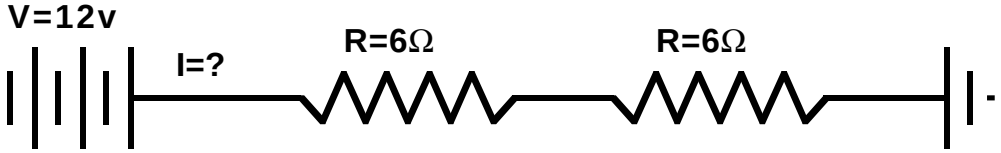

5. V= ?

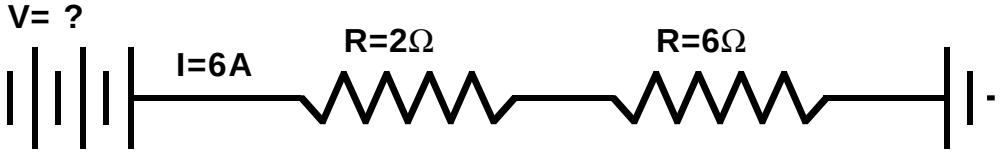

6. V=18v

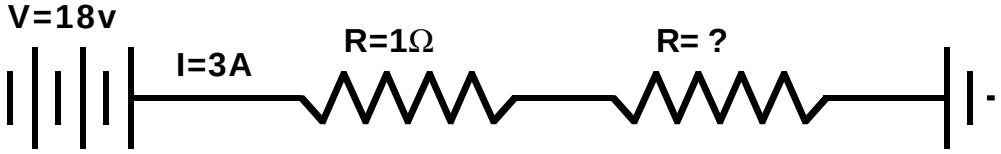

7. V=12v

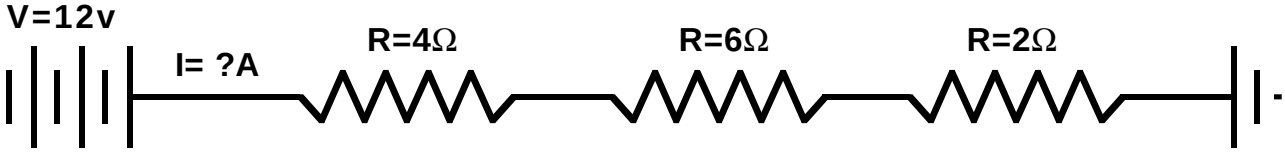

8. V= ?

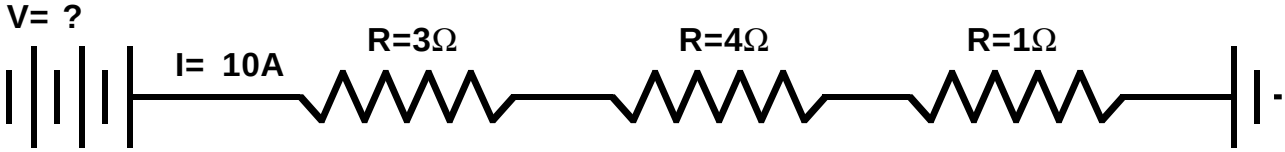

9. V=50v

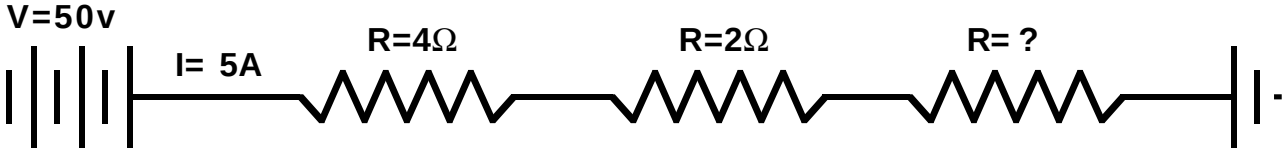

10. V= ?v

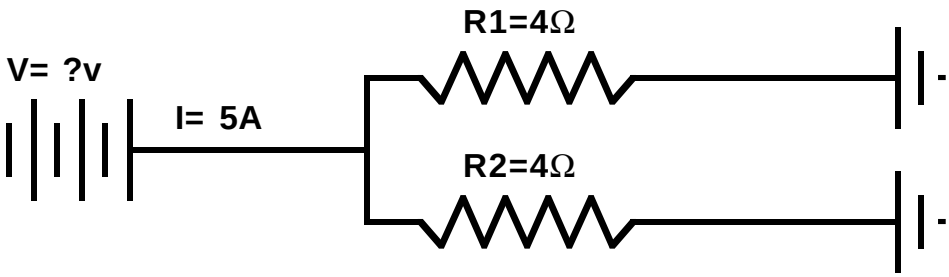

11. V=15

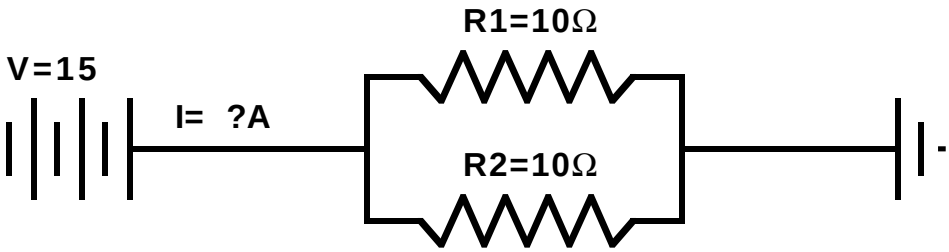

12. V= ?v

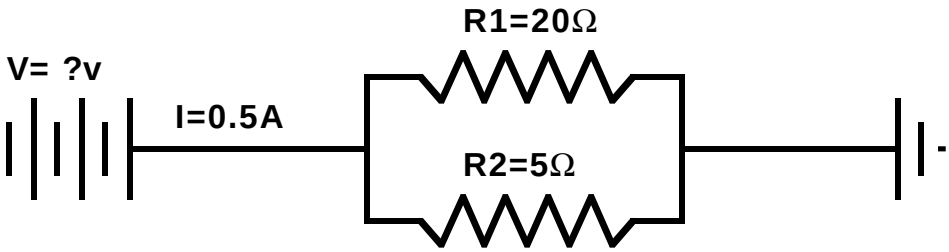

13.

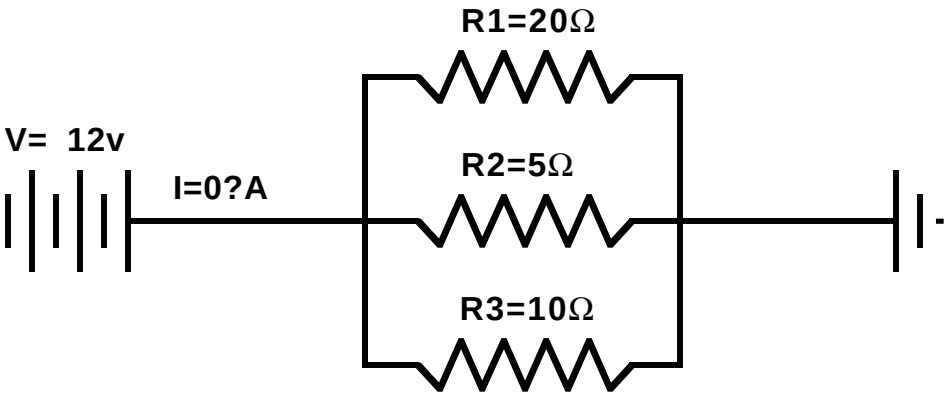
V= 12v
I=0?A
R1=20Ω
R2=5Ω
R3=10Ω

14.

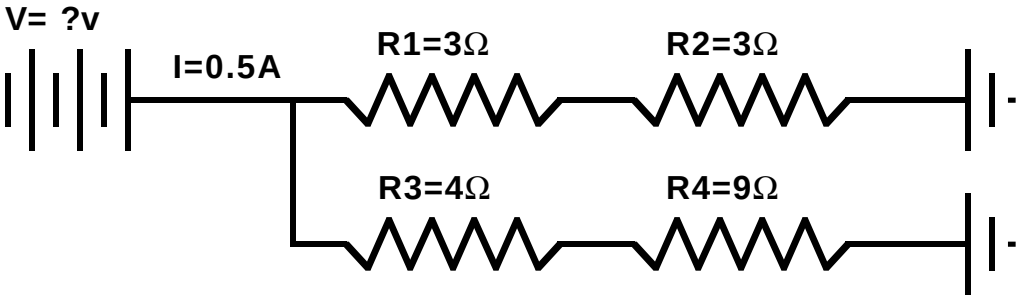
V= ?v
I=0.5A
R1=3Ω
R2=3Ω
R3=4Ω
R4=9Ω

15.

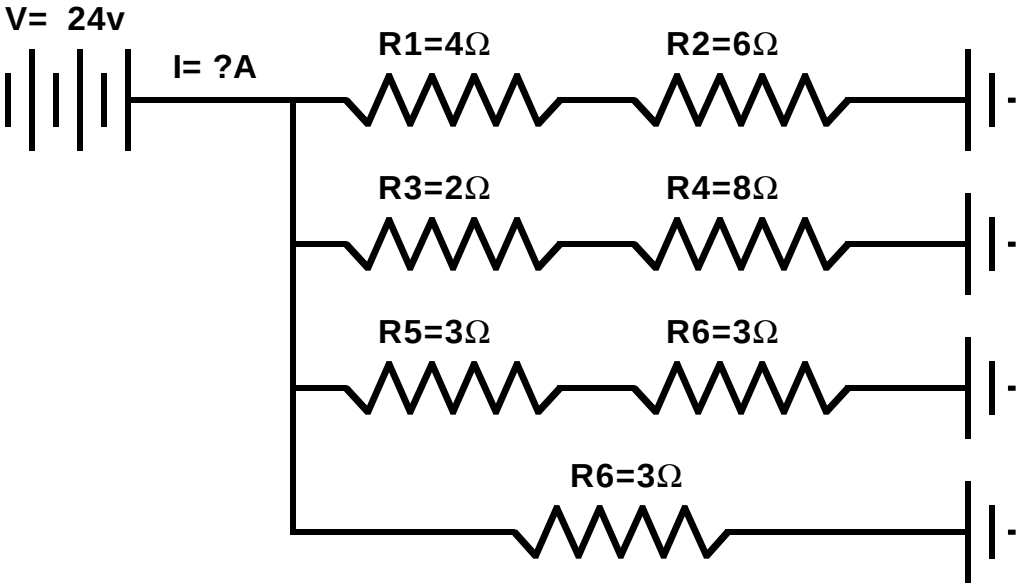
V= 24v
I= ?A
R1=4Ω
R2=6Ω
R3=2Ω
R4=8Ω
R5=3Ω
R6=3Ω
R6=3Ω

16.

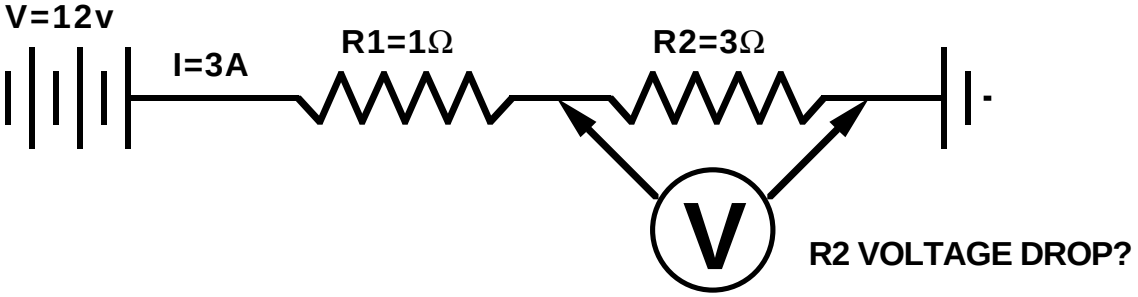
V=12v
I=3A
R1=1Ω
R2=3Ω
V
R2 VOLTAGE DROP?

17.

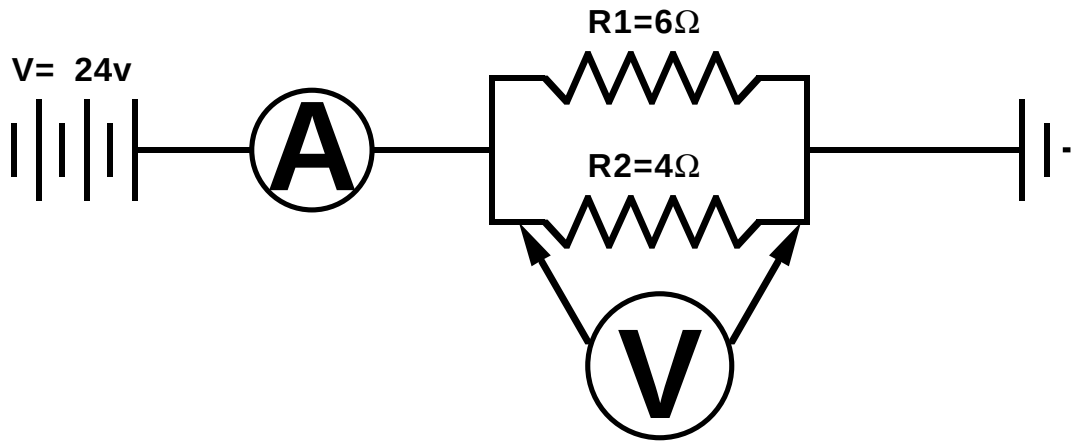
V= 24v
R1=6Ω
R2=4Ω
A
V

18.

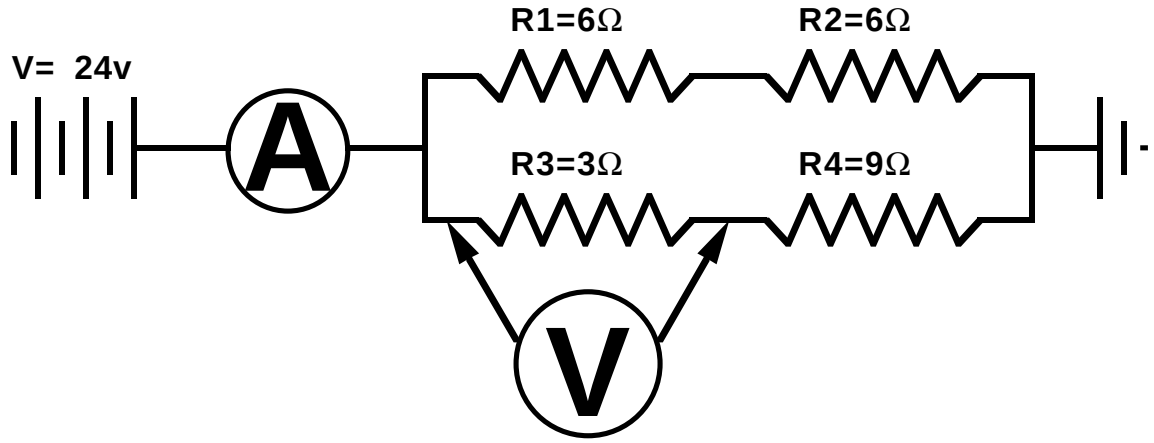
V= 24v
R1=6Ω
R2=6Ω
R3=3Ω
R4=9Ω
A
V

19.

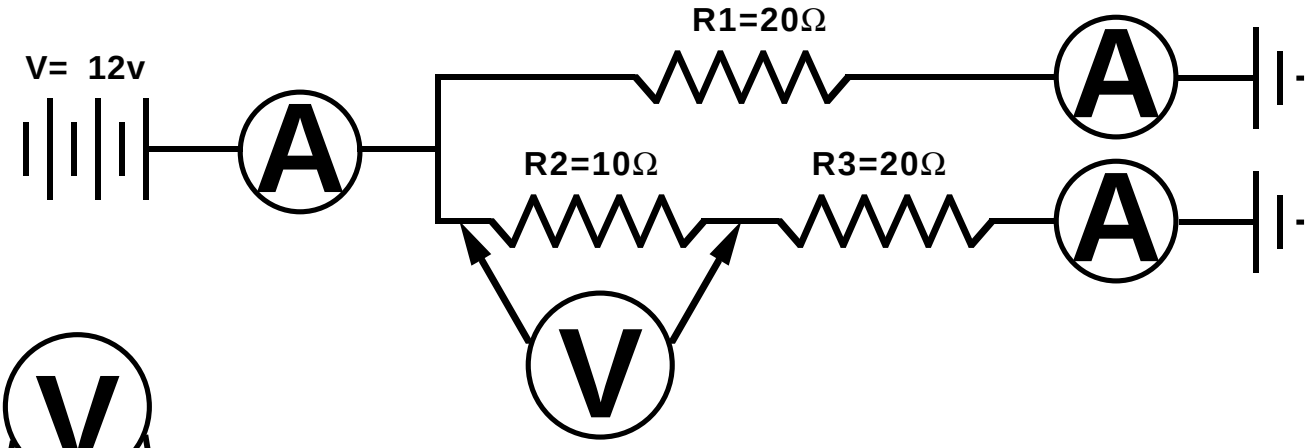
V= 12v
R1=20Ω
R2=10Ω
R3=20Ω
A
A
A
V

20.

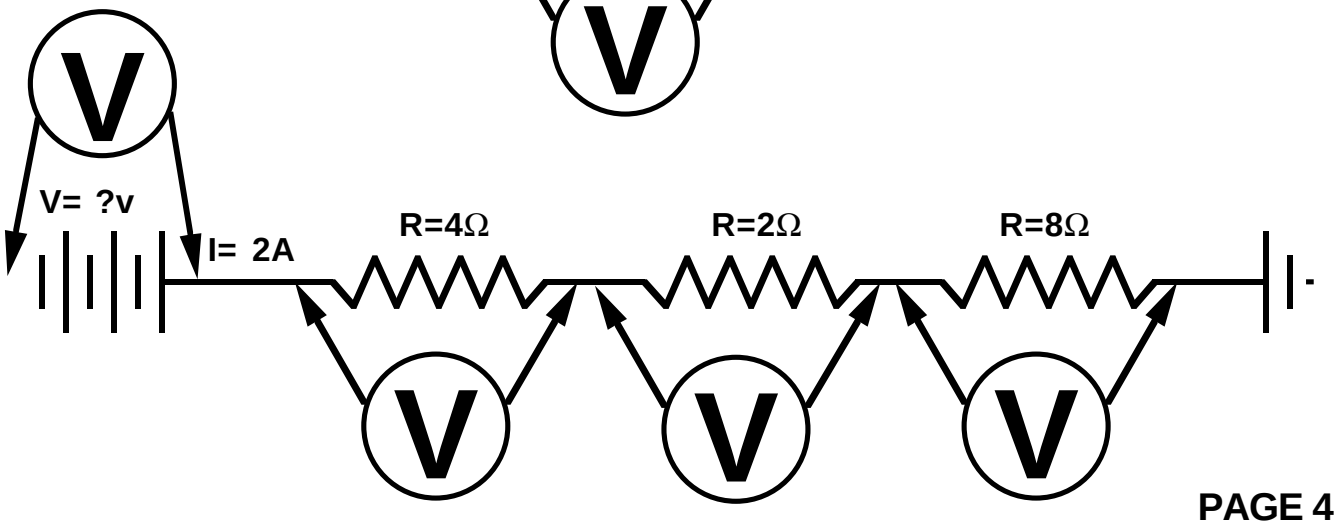
V
V= ?v
I= 2A
R=4Ω
R=2Ω
R=8Ω
V
V
V

21.

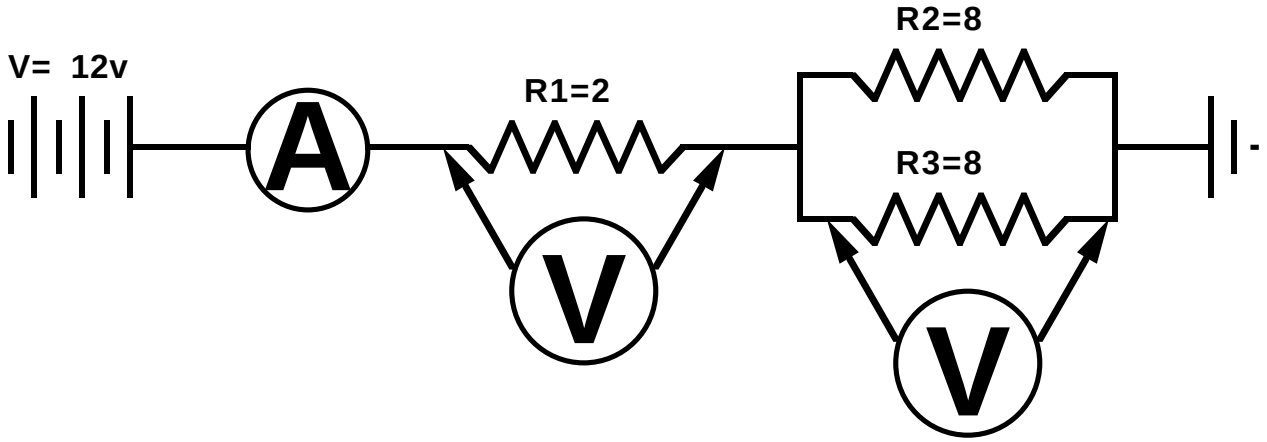
V= 12v
A
R1=2
V
R2=8
R3=8
V

22.

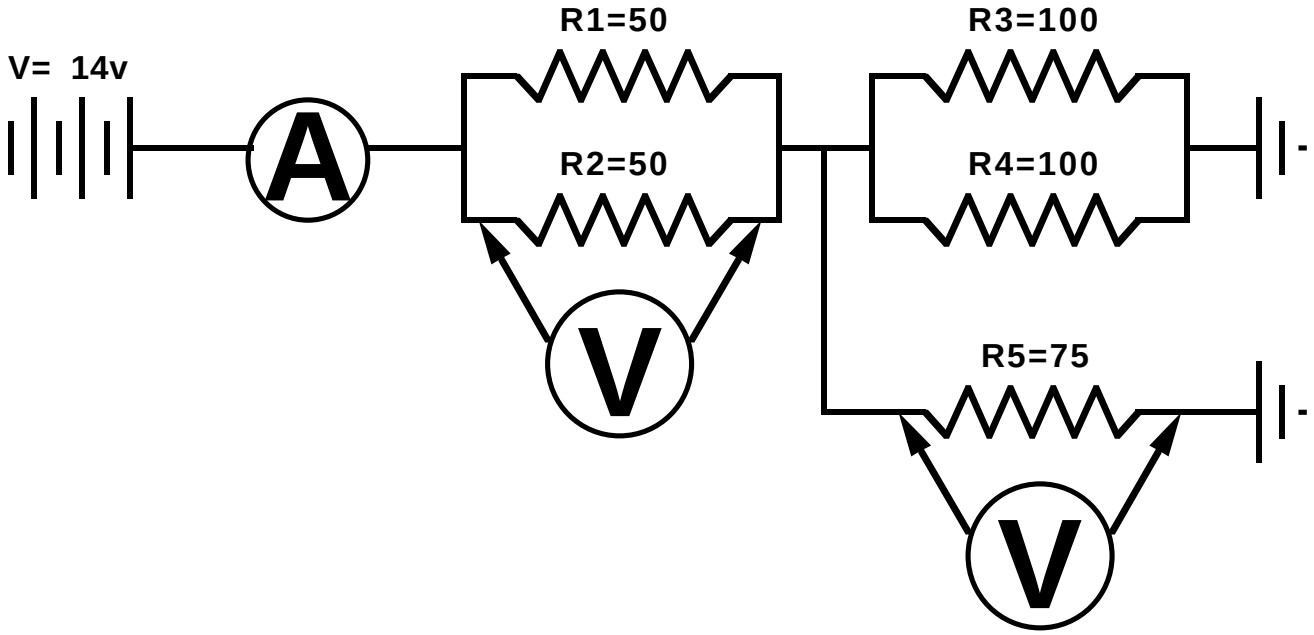
V= 14v
A
R1=50
R2=50
V
R3=100
R4=100
R5=75
V

23.

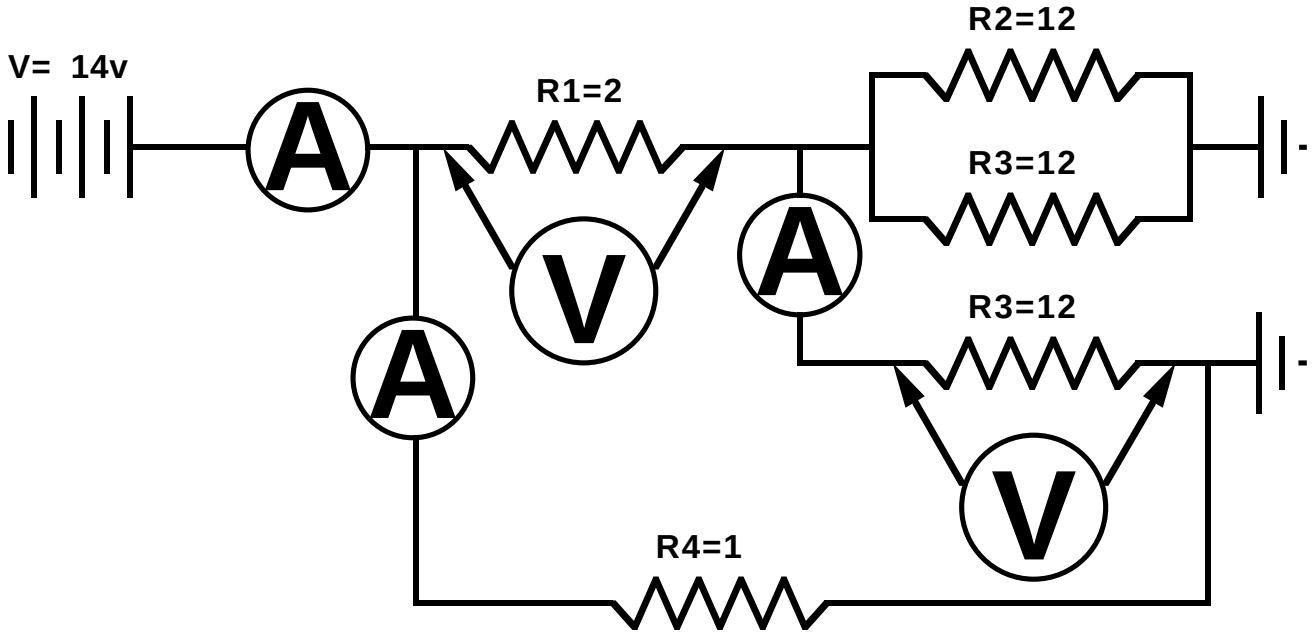
V= 14v
A
R1=2
V
A
A
R2=12
R3=12
R3=12
V
R4=1

24.

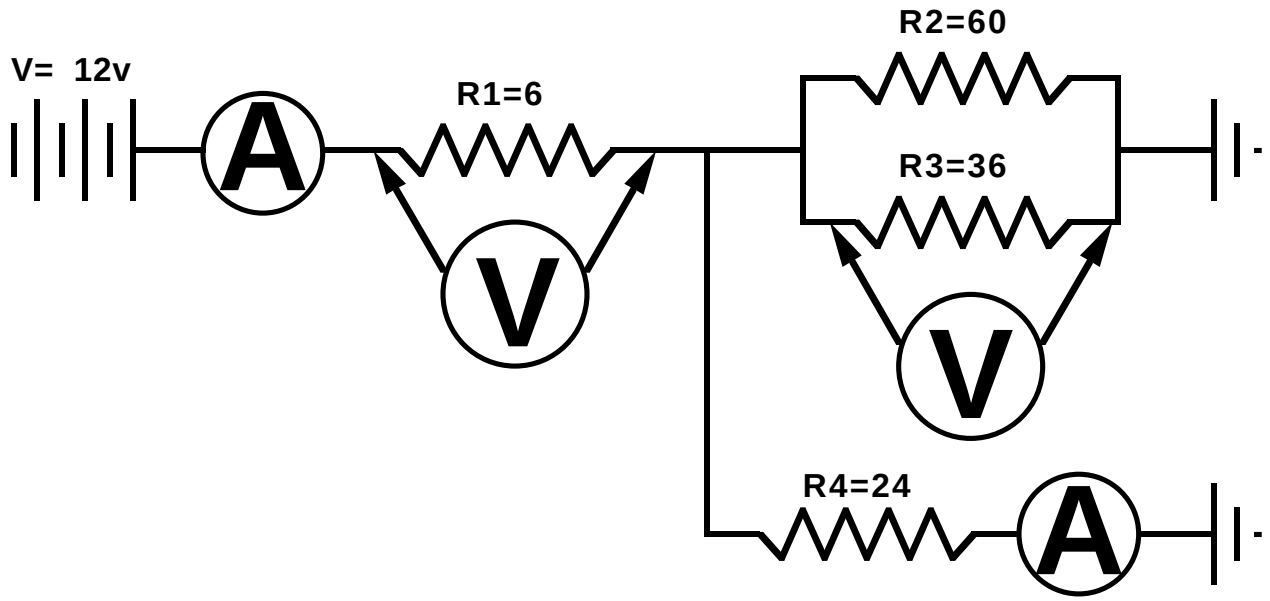

25.